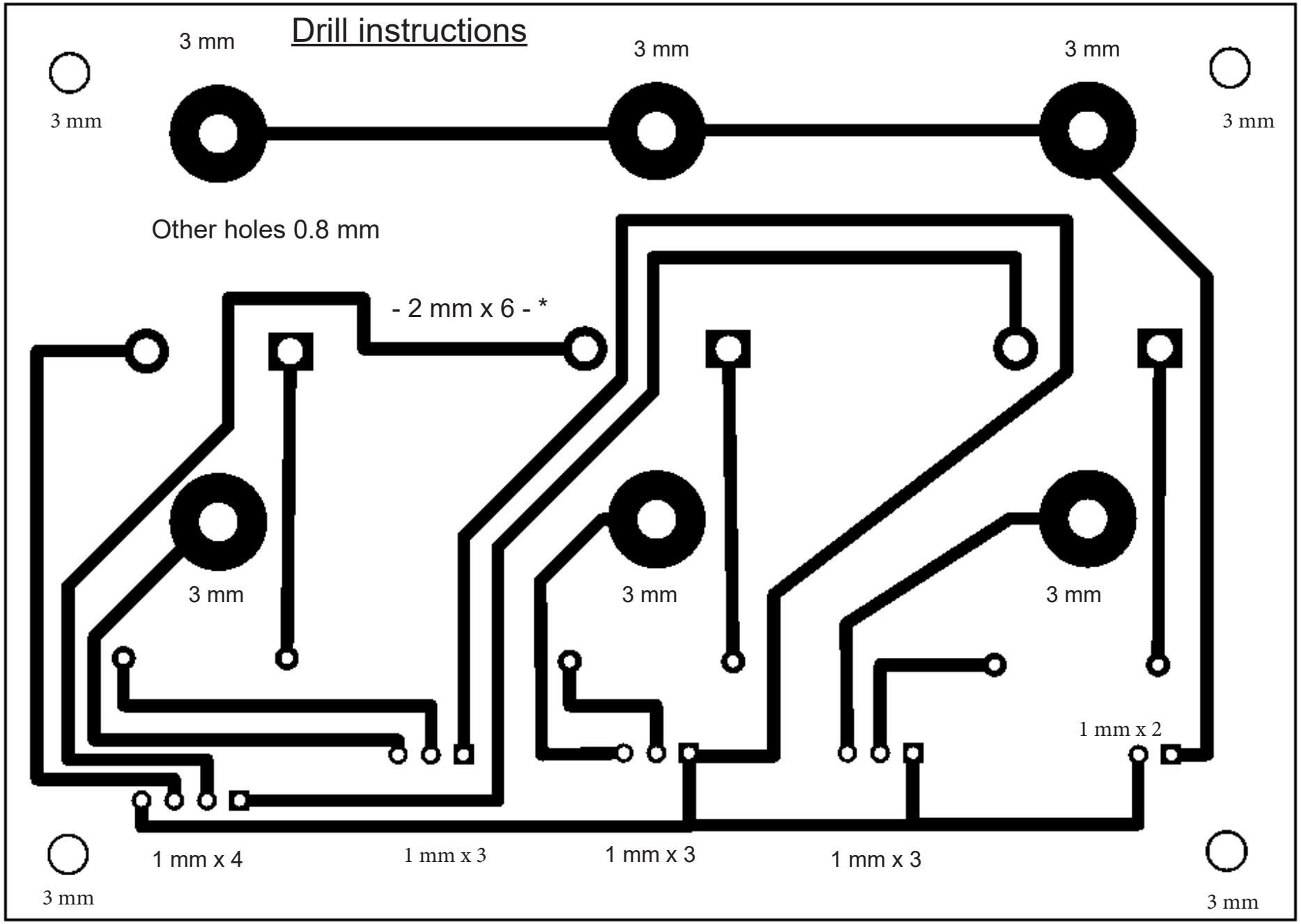

* diameter of transistor pins may vary depending on the manufacturer

Seen from the solder side, the circuit layout, must be mirror-inverted should then look like this