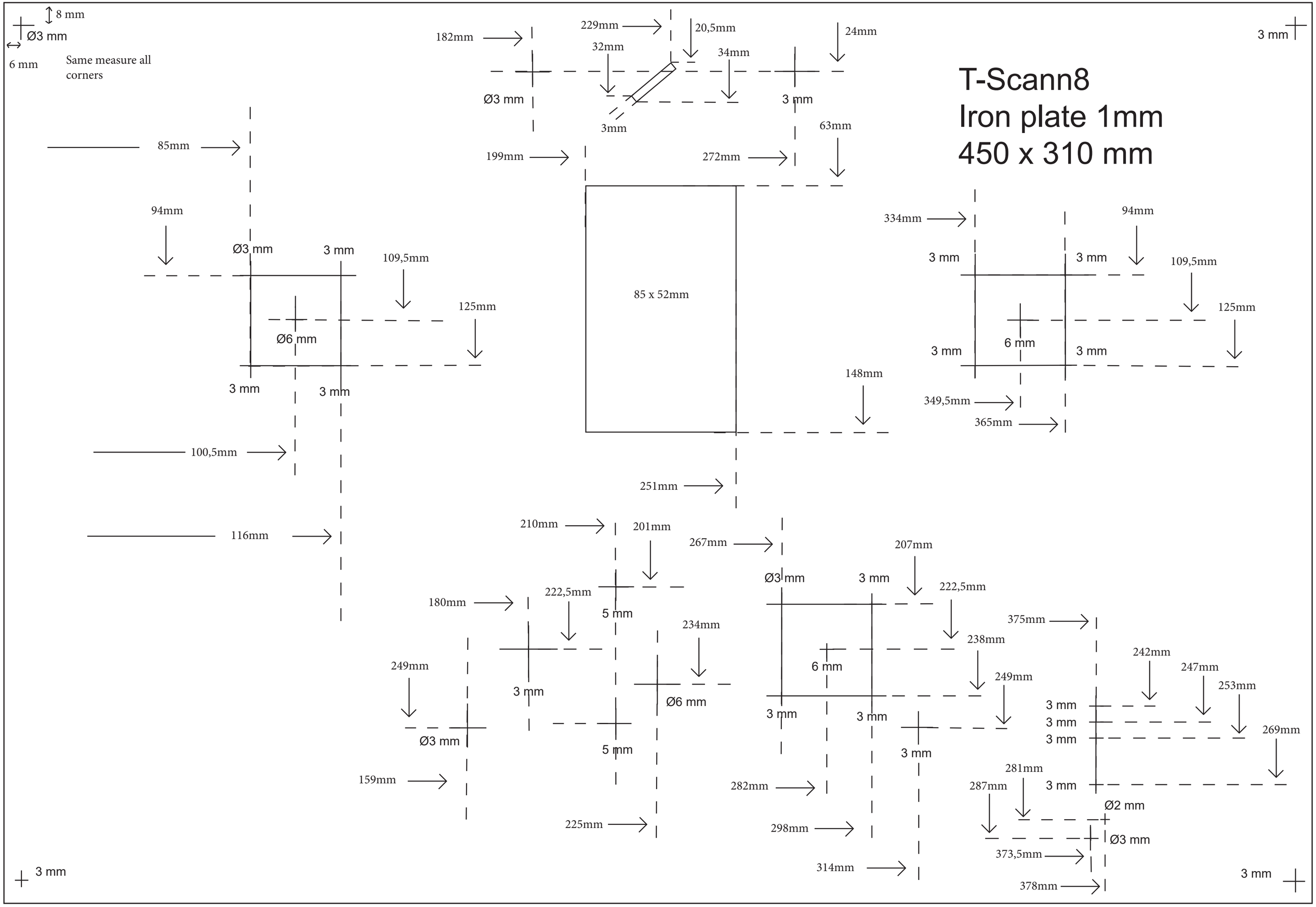T-Scann8
Iron plate 1mm
450 x 310 mm